REQUEST FOR BID
Concrete
Lake of the Woods Forest Preserve

Issued on September 22nd, 2022
Responses due 10:00AM (local time), October 6th, 2022

Champaign County Forest Preserve District
P.O. Box 1040 / Mahomet, IL 61853

CCFPD is an equal opportunity employer (EOE). CCFPD encourages all interested businesses to provide bids for this work, including but not limited to small business (SBA), minority and women owned businesses (MBE/WBE).

PROJECT SUMMARY

Notice is hereby given that Proposals will be received by the Board of Commissioners, Champaign County Forest Preserve District, at the Headquarters building at Lake of the Woods Forest Preserve, P.O. Box 1040, 109 South Lake of the Woods Road, Mahomet, IL, 61853, until **10:00 A.M. (local time), October 6th, 2022**, for the **Lake of the Woods Concrete** described below:

Furnish all labor and materials to install concrete at Lake of the Woods Forest Preserve.

Proposals must be addressed to the Board of Commissioners, Champaign County Forest Preserve District, P.O. Box 1040, Mahomet, IL 61853. Proposals must be enclosed in a sealed envelope with the bidder's name and **Lake of the Woods Concrete** clearly marked on the outside of the envelope. Hand delivered proposals may be brought to the employee entrance.

The successful bidder will be required to furnish a Certificate of Insurance naming the Champaign County Forest Preserve District as Co-Insured. The successful bidder will be required to furnish and pay for a Contract Bond in the amount of 100% of the Contract amount. Owner has determined that the project will not be subject to State of Illinois sales tax. Bidders shall not include said sales tax amounts in their bids. CCFPD's tax exempt number: E 9998-5144-07

Contractors will be required to comply with all federal, state and municipal laws and regulations, including those related to discrimination, prevailing wage, safety, drug-free workplace, bid rigging, human rights, preferential employment of Illinois labor and equal opportunity employment. Minority and female-owned businesses are encouraged to submit proposals.

Prevailing Wage: Champaign County **prevailing wage rates shall be paid**. Current rates: https://www2.illinois.gov/idol/Laws-Rules/CONMED/Pages/2018-Rates.aspx

Complete sets of contract documents may be obtained after September 22nd, 2022 from the District Headquarters Office, 109 S. Lake of the Woods Rd., Mahomet, IL 61853 (217-586-3360) or, from http://www.ccfpd.org/about/bids-rfps. Printed packets will be made available by request from the District Headquarters Office, 109 S. Lake of the Woods Rd., Mahomet, IL 61853. Please call (217-586-3360) or email bmoen@ccfpd.org to request a packet.

There will be an optional, on site, **pre-bid meeting for this project on September 29th, 2022 at 9:00am**. Please meet on-site in the Botanical Gardens near the pond. The address for the Botanical Gardens entrance is 950 N Lombard St, Mahomet, IL.

The Board of Commissioners of the Champaign County Forest Preserve District reserves the right to reject any, part of any, or all proposals, to waive any informality or irregularity in the proposals or the proposal process, to accept any proposals which it deems most favorable, and to continue letting from time to time as deemed necessary.

Contact Persons:

- For all project specification and construction questions: **Bridgette Moen, Planning and Projects Coordinator / 217.586.3360 / bmoen@ccfpd.org**
- For all contract and payment questions: **John Baker, Director of Business, Finance, HR / 217.586.3360 / jbaker@ccfpd.org**
-

Required Insurance: The Contractor, prior to execution of the Contract, shall file with the Owner a copy of a completed Certificate of Insurance satisfactory to the Owner, to afford protection against all claims for Worker's Compensation, damages to public or private property, injuries to persons arising out of and during the progress of the Work to its completion, and other insurance as follows. The policy of insurance shall include the Owner as an additional insured or provide separate coverage with an Owner's Protective Policy. The minimum amounts of insurance shall be as follows:

- Commercial General and Umbrella Liability Insurance not less than $1,000,000.00
- Continuing Completed Operations Liability Insurance not less than $1,000,000.00
- Business Auto and Umbrella Liability Insurance not less than $1,000,000.00
- Worker's Compensation Insurance not less than $1,000,000.00

Board of Commissioners
Champaign County
Forest Preserve District
Andrew Kerins, Secretary

INSTRUCTIONS TO BIDDERS

I. Competency of Bidders

A. Eligibility: All Bidders must be experienced and licensed in the type of work included in this contract. Before Contract is awarded, the Bidder may be required to furnish an outline of his/her plans for conducting the Work.

B. Revocation: The Champaign County Forest Preserve District (hereinafter referred to as the Owner) reserves the right to reject any proposal, or if awarded, revoke any contract if the evidence submitted by, or investigation of such Bidder fails to satisfy Owner that such Bidder is properly qualified to do the Work as set forth in the Contract Documents.

II. Bidding Requirements

A. Contract Documents

1. Contract Documents may be obtained in accordance with the Request for Proposals.

2. Contract Documents are in a Project Manual containing the following:
   a. Project Summary
   b. Instructions to Bidders
   c. Bid Proposal Form
   d. General Conditions
   e. Draft Contract
   f. Draft Wavier of Lien and Affidavit
   g. Draft Contract Bond
   h. Draft Change Order Form
   i. Specifications

3. Examination of Contract Documents: Bidders shall carefully examine the Contract Documents to ensure awareness of legal obligations. Each Bidder shall promptly report any errors or inconsistencies to the Owner prior to bid submission. Each Bidder, by submitting their bid, represents that they have so examined the Contract Documents, that they understand the provisions of the Contract Documents. Bidders will not be given extra payment or contract time for conditions which could have been determined by such examinations.

4. Addenda: All changes in or interpretations of the bidding documents prior to the bid opening will be made by written addenda issued by the Owner to each recipient of the Contract Documents recorded by the Owner. Questions received less than two (2) days prior to the date for opening of bids may not be answered. Only questions answered by formal written addenda will be binding. Receipt of each addendum shall be acknowledged in the bid.

B. Bid Preparation

1. Bids shall be submitted on the Bid Form provided with these Contract Documents. The Bidder shall not make changes in the Bid Form provided with these Contract Documents. The Bidder shall fill in all relevant blank spaces including alternate bids and unit prices legibly, with ink or typewriter

and not in pencil. When any base bid, alternate bid or unit price is omitted, the Owner may reject the entire bid. Bids containing conditional or qualified statements will not be accepted. When a Bidder submits a Bid Form containing erasures or other changes, each erasure or change shall be initialed by an authorized person. Original signatures on Bid Form are required. Facsimiles or photocopied signatures are unacceptable.

2. Signing Bid Submittal Documents: All Bid Documents shall be signed by a person authorized to bind the business entity to a contract. The legal name of the business entity (sole proprietorship, corporation, partnership, joint venture, etc.) shall be stated. The name and title of the individual signing the documents shall be typed or printed below their signature.

C. Bid Submission
Shall be as described in the Request for Proposals. Bids must be received by **10:00 A.M. (local time), October 6th, 2022**, at the CCFPD Headquarters Building, PO Box 1040 (USPS), 109 S. Lake of the Woods Rd. (hand delivery or delivery service), Mahomet, Illinois. The maximum sheet size for bid submissions is 8½ x 11". Please acount for any delay with mailed bids.

III. Contract Award Procedures

A. Right to Accept or Reject Bids:

1. Improper Form: Bids may be rejected as improper if they show omissions, alterations, erasure, additions not called for, or irregularities of any kind. The Owner reserves the right to waive technicalities, reject any or all proposals, re-advertise for proposals or perform the Work if, in the judgement of the Owner, the interest of the Owner will be enhanced thereby. A conditional or qualified bid will not be accepted. All bids and accompanying data must be submitted in conformity with, be based upon and be subject to all the requirements of the Contract Documents.

B. Award of Contract:

1. Notification to Successful Bidder: The successful Bidder will be notified by the Owner by mail, as soon after the opening of the bid proposals as practicable, but within forty five (45) calendar days of the date of opening of bids.

2. Bids will be read aloud by District staff on **10:00 A.M. (local time), October 6th, 2022** at the CCFPD Headquarters Building, 109 S. Lake of the Woods Rd., Mahomet, Illinois

3. An approved Contract executed by the Owner is required before the Owner is bound. An award may be cancelled at any time by the Owner prior to execution if, in the judgement of the Owner, the best interests of the Owner will be promoted thereby.

4. If a contract is not awarded within forty five (45) days after the opening of the bids, bidders may file a written request with the Owner for withdrawal of their bid, and the Owner will permit such withdrawal.

C. Insurance: The Contractor, prior to execution of the Contract, shall file with the Owner a copy of a completed Certificate of Insurance satisfactory to the Owner, to afford protection against all claims for Worker's Compensation, damages to public or private property, injuries to persons arising out of and during the progress of the Work to its completion, and other insurance as set forth in the Contract Documents. The policy of insurance shall include the Owner as an additional insured or provide separate coverage with an Owner's Protective Policy. The minimum amounts of insurance shall be as set forth in the General Conditions.

D. Contract time: The Contract deadline for completion is **December 30, 2022.**

E. Execution of Contract: The successful Bidder will be required to execute the Contract, obtain adequate insurance coverage, and obtain the Contract Bond within fifteen (15) calendar days from the date of receipt of notification of award. Bid Bond will be returned to successful Bidder with delivery of executed contract.

F. Payment: Payments will be made in the form of a check issued by the Owner. Applications for payment must be submitted on the form included in the contract documents. Each application for payment must reflect a retainage of 10%. Each application for payment must be accompanied by certified payroll forms and lien waivers pertaining to the work that has been completed.

G. Change Orders: All change orders must be approved by Owner prior to start of work. Contractor is liable for cost of work completed without Owner’s consent.

BID FORM

The Undersigned:

1. Has examined all Bidding Documents. The Bidder shall be responsible for performing all Work required by all parts of the Bidding Documents. This Work shall include all labor, materials and equipment necessary to perform each and every act and thing necessary, for the proper execution and completion of said Work, as shown and specified in the Contract Documents. It shall also include all Work not specifically included in the Contract Documents which is properly inferable and necessary for the completion of this Work.

2. The undersigned further declares that they have carefully examined the Instructions to Bidders, Bid Form, Contract, General Conditions, Plans, Specifications, Addenda and any other portion of the Contract Documents. Bidder declares that they have familiarized themselves with all of the local conditions affecting the Contract, and understands that in submitting this Bid, the Bidder waives all right to plead any misunderstanding regarding the same.

3. Agrees:

   A. To hold this bid open until 45 calendar days after bid opening date.

   B. To enter into and execute a Contract with the Champaign County Forest Preserve District, if awarded on the basis of this bid, and in connection therewith to:

      1. Furnish certificate of insurance in accord with the Bidding Documents.
      2. Accomplish the Work in accord with the Contract.
      3. Complete the Work within the specified Contract time.

4. Contractor shall commence Work within a reasonable time after receipt of the executed Contract, and shall complete all Work by **December 30th, 2022** unless the Owner grants an extension.

5. The Bidder, in compliance with the Request for Proposals for the **Lake of the Woods Concrete,** having examined the Project Manual containing the Contract Documents, and being familiar with all of the conditions surrounding the proposed project including the availability of materials, hereby proposes to furnish all materials and supplies, within the time set forth therein, and at the prices stated below. These prices are to cover all expenses incurred in performing the Work required under the Contract Documents, of which this Bid is a part.

6. The undersigned submits herewith his schedule of prices covering the Work to be performed under this Contract.

BID FORM	**Approximate Area**	**Total ($)**
Botanical Gardens Concrete	364sf	
Other (please describe)		
Other (please describe)		
Total Base Bid		
Add alternate 1: Additional pour at Botanical Gardens	1800sf	
Total Bid		

Substitution documentation attached (if applicable): ☐

Receipt of addenda (if applicable):

No. ____ Dated _____ No. ____ Dated _____

No. ____ Dated _____ No. ____ Dated _____

SUBMITTED BY:

Company

Email

Company Representative

Phone

Address

Authorized Agent's Signature

City/State

Date

FIN or SS

GENERAL CONDITIONS

ARTICLE 1 - GENERAL PROVISIONS

1.1 In case of a discrepancy or inconsistency in the Plans and Specifications, or between the Plans and Specifications, the matter shall be referred to the Owner for decision and correction before any work is done.

1.2 The exactness of grades, elevations, dimensions, or locations given on any Drawing issued by the Owner, or the work installed by other Contractors, is not guaranteed by the Owner.

Each Contractor shall, therefore, satisfy itself as to the accuracy of all grades, elevations, dimensions, and locations. On all cases of interconnections of proposed work with existing or other work, Contractor shall verify (at the site) dimensions relating to such existing or other work. Any errors due to the Contractor's failure to so verify all such grades, elevations, locations, or dimensions shall be promptly rectified without extra cost to the Owner.

1.3 In the event the Owner is required to retain an attorney to enforce the provisions of this Contract, if the Contractor is found to be in default, the Contractor shall be required to pay the Owner's reasonable attorney's fees.

ARTICLE 2 – CONTRACT DOCUMENTS

2.1 The Contract Documents comprise the entire agreement between Owner and Contractor concerning the Work. The Contract Documents are complementary: what is called for by one is as binding as if called for by all.

2.2 It is the intent of the Contract Documents to describe a functionally complete Project (or part thereof) to be constructed in accordance with the Contract Documents. Any Work, materials or equipment that may reasonably be inferred from the Contract Documents as being required to produce the intended result shall be supplied whether or not it is specifically called for.

2.3 If any physical condition is uncovered or revealed at the site that differs materially from that indicated, reflected or referred to in the Contract Documents, or that will interfere or cause problems with successful and satisfactory completion of the Work called for by the Contract Documents, the Contractor shall, promptly after becoming aware thereof and before performing any Work in connection therewith, notify the Owner about the problem, and obtain a solution from the Owner prior to continuing with the Work.

ARTICLE 3 - PAYMENTS AND COMPLETION

3.1 The schedule of values shall be prepared in a manner that shows each major portion of the Work as a separate line item of labor and materials. The Contractor shall identify those line items of Work that will be accomplished by subcontractors, and shall identify the subcontractors and material suppliers, and the amounts to come due to each. It shall further state the value of work to be completed by the Contractors' own forces.

The following line items shall also be included:

Overhead and Profit
Insurance, Bonds and Permits
Project Mobilization
Project Supervision and Coordination

3.2 Requests for payment shall be submitted on the Application for Payment included in these Contract Documents and shall detail the value of the various materials stored on the site and the value of the various types of labor performed.

3.3 Applications for payment shall reflect a retainage of 10%. The percentage amount requested for overhead and profit shall not exceed the percentage of total funds requested for the project.

Requests for payment shall be submitted to the Planning and Projects Coordinator, Bridgette Moen, addressed to the Headquarters building at Lake of the Woods Forest Preserve, P.O. Box 1040, 109 South Lake of the Woods Road, Mahomet, IL, 61853. Invoices shall be submitted by the first day of each month. Payment will be issued following monthly Board meetings, which take place the second Wednesday of each month.

Each Application for Payment shall be accompanied by partial waivers of lien from all subcontractors and material suppliers in the full amount of their respective portion of the request for payment, and with the Contractors' own waiver of lien for the full amount of such request for payment.

3.4 FINAL WAIVER OF LIEN

Before final payment is due the Contractor shall submit to the Owner in two copies, final waivers of lien from all subcontractors and material suppliers in the full amount of the subcontract and cost of materials, respectively, along with the Contractor's final waiver of lien in the full amount of the Contract.

ARTICLE 4 – INSURANCE REQUIRED OF THE CONTRACTOR

The Contractor shall not commence work under the Contract until all the required insurance has been obtained. Certificates of Insurance showing coverage as required to be in effect must be filed with the Owner at the time of entering into the Contract.

The Contractor shall maintain in force the coverage required in this section for the term of the Contract. Also, the Contractor shall not allow any Subcontractor to commence Work on any portion of the Project without evidence that the Subcontractor has insurance coverage equal to the coverage required in this section.

Contractor shall obtain insurance of the types and in the amounts listed below.

4.1 Commercial General and Umbrella Liability Insurance

Contractor shall maintain commercial general liability (CGL) and, if necessary, commercial umbrella insurance with a limit of not less than $1,000,000 each occurrence. If such CGL insurance contains a general aggregate limit, it shall apply separately to this project/location.

CGL insurance shall be written on Insurance Services Office (ISO) occurrence form CG 00 01 10 93, or a substitute form providing equivalent coverage, and shall cover liability

arising from premises, operations, independent contractors, products-completed operations, personal injury and advertising injury, and liability assumed under an insured contract (including the tort liability of another assumed in a business contract).

Owner shall be included as an insured under the CGL, using ISO additional insured endorsement CG 20 10 or a substitute providing equivalent coverage, and under the commercial umbrella, if any. This insurance shall apply as primary insurance with respect to any other insurance or self-insurance afforded to Owner. Any insurance or self-insurance maintained by the Owner shall be excess of the Contractor's insurance and shall not contribute with it.

There shall be no endorsement or modification of the CGL limiting the scope of coverage for liability arising from pollution, explosion, collapse, or underground property damage.

4.2 Continuing Completed Operations Liability Insurance

Contractor shall maintain commercial general liability (CGL) and, if necessary, commercial umbrella liability insurance with a limit of not less than $1,000,000 each occurrence for at least three years following substantial completion of the work.

Continuing CGL insurance shall be written on ISO occurrence form CG 00 01 10 93, or substitute form providing equivalent coverage, and shall, at minimum, cover liability arising from products-completed operations and liability assumed under an insured contract.

Continuing CGL insurance shall have a products-completed operations aggregate of at least two times its each occurrence limit.

Continuing commercial umbrella coverage, if any, shall include liability coverage for damage to the insured's completed work equivalent to that provided under ISO form CG 00 01.

4.3 Business Auto and Umbrella Liability Insurance

Contractor shall maintain business auto liability and, if necessary, commercial umbrella liability insurance with a limit of not less than $1,000,000 each accident. Such insurance shall cover liability arising out of any auto including owned, hired and non-owned autos.

Business auto insurance shall be written on Insurance Services Office (ISO) form CA 00 01, CA 00 05, CA 00 12, CA 00 20, or a substitute form providing equivalent liability coverage. If necessary, the policy shall be endorsed to provide contractual liability coverage equivalent to that provided in the 1990 and later editions of CA 00 01.

4.4 Workers' Compensation Insurance

Contractor shall maintain workers' compensation as required by statute and employers liability insurance. The commercial umbrella and/or employer's liability limits shall not be less than $1,000,000 each accident for bodily injury by accident or $1,000,000 each employee for bodily injury by disease.

If Owner has not been included as an insured under the CGL using ISO additional insured endorsement CG 20 10 under the Commercial General and Umbrella Liability Insurance required in this Contract, the Contractor waives all rights against Owner and

its officers, officials, employees, volunteers and agents for recovery of damages arising out of or incident to the Contractor's work.

4.5 General Insurance Provisions

4.5.1 Evidence of Insurance

Prior to beginning work, Contractor shall furnish Owner with a Certificate(s) of Insurance and applicable policy endorsement(s), executed by a duly authorized representative of each insurer, showing compliance with the insurance requirements set forth above.

All certificates shall provide for 30 days' written notice to Owner prior to the cancellation or material change of any insurance referred to therein. Written notice to Owner shall be by certified mail, return receipt requested.

Failure of Owner to demand such certificate, endorsement or other evidence of full compliance with these insurance requirements or failure of Owner to identify a deficiency from evidence that is provided shall not be construed as a waiver of Contractor's obligation to maintain such insurance.

Owner shall have the right, but not the obligation, of prohibiting Contractor or any Subcontractor from entering the project site until such certificates or other evidence that insurance has been placed in complete compliance with these requirements is received and approved by Owner.

Failure to maintain the required insurance may result in termination of this Contract at Owner's option.

With respect to insurance maintained after final payment in compliance with a requirement above, an additional certificate(s) evidencing such coverage shall be promptly provided to Owner whenever requested.

Contractor shall provide certified copies of all insurance policies required above within 10 days of Owner's written request for said copies.

4.5.2 Acceptability of Insurers

For insurance companies which obtain a rating from A.M. Best, that rating should be no less than A VII using the most recent edition of the A.M. Best's Key Rating Guide. If the Best's rating is less than A VII or a Best's rating is not obtained, the Owner has the right to reject insurance written by an insurer it deems unacceptable.

4.5.3 Cross-Liability Coverage

If Contractor's liability policies do not contain the standard ISO separation of insureds provision, or a substantially similar clause, they shall be endorsed to provide cross-liability coverage.

4.5.4 Deductibles and Self-Insured Retentions

Any deductibles or self-insured retentions must be declared to the Owner. At the option of the Owner, the Contractor may be asked to eliminate such deductibles or self-insured retentions as respects the Owner, its officers, officials, employees, volunteers and agents or required to procure a bond guaranteeing payment of losses and other related costs including but not limited to investigations, claim administration and defense expenses.

4.5.5 Subcontractors
Contractor shall cause each subcontractor employed by Contractor to purchase and maintain insurance of the type specified above. When requested by the Owner, Contractor shall furnish copies of certificates of insurance evidencing coverage for each subcontractor.

4.6 Indemnification
To the fullest extent permitted by law, the Contractor shall indemnify and hold harmless the Owner and the Architect and their officers, officials, employees, volunteers and agents from and against all claims, damages, losses and expenses, including but not limited to legal fees (attorneys' and paralegals' fees and court costs), arising out of or resulting from the performance of the Contractor's work, provided that any such claim, damage, loss or expense (i) is attributable to bodily injury, sickness, disease or death, or injury to or destruction of tangible property, other than the work itself, including the loss of use resulting there from and (ii) is caused in whole or in part by any wrongful or negligent act or omission of the Contractor, any Subcontractor, anyone directly or indirectly employed by any of them or anyone for whose acts any of them may be liable, except to the extent it is caused in part by a party indemnified hereunder. Such obligation shall not be construed to negate, abridge, or otherwise reduce any other right or obligation of indemnity which would otherwise exist as to any party or person described in this Paragraph. Contractor shall similarly protect, indemnify and hold and save harmless the Owner, its officers, officials, employees, volunteers and agents against and from any and all claims, costs, causes, actions and expenses including but not limited to legal fees, incurred by reason of Contractor's breach of any of its obligations under, or Contractor's default of, any provision of the Contract.

ARTICLE 5 – CONTRACTOR'S RESPONSIBILITIES

5.1 SUPERVISION AND SUPERINTENDENCE:
Contractor shall supervise and direct the Work competently and efficiently, devoting such attention thereto and applying such skills and expertise as may be necessary to perform the Work in accordance with the Contract Documents. Contractor shall be responsible to see that the finished Work complies accurately with the Contract Documents

5.2 CODES AND REGULATIONS:

5.21 All work shall be done in compliance with current federal, state and local building codes and safety regulations. Contractor(s) shall be familiar with these regulations and guidelines and shall strictly adhere to them.

5.22 The contractor is responsible for all fees and building permits for this project from Champaign County. All permit information shall be provided to the Owner. Contractor is responsible for contacting permiting agencies to arrange inspections as neccessary and notify Owner of all inspections.

5.3 STRUCTURES AND UTILITIES ENCOUNTERED:
It is the responsibility of the Contractor to accurately identify locations and dimensions of all utilities, whether or not they are shown in the Plans. The Contractor shall be entirely responsible for all damages to water pipes; electrical conduits; existing drains or sewers; gas pipes; and poles carrying electrical current, telephone or telegraph lines, during the

execution of the Work and shall be liable for damages to public or private property resulting.

5.4 USE OF PREMISES:

5.41 Contractor shall confine construction equipment , the storage of materials and equipment and the operations of workers to the project boundaries identified by the Owner.

5.42 Contractor shall assume full responsibility for any damage to the Owner's lands and property, or of any land or areas contiguous thereto, resulting from performance of the Work, and shall return such properties to as found condition.

5.43 During the progress of the Work, Contractor shall keep the premises free from accumulations of waste materials, rubbish and debris from and about the premises, and shall be responsible for removal of said waste materials and debris from the site. Contractor shall restore to original condition all property not specifically designated for alteration by the Owner.

5.44 Contractor shall be responsible for initiating, maintaining and supervising all safety precautions and programs in connection with the Work. Contractor shall take all necessary precautions for the safety of, and shall provide the necessary protection to prevent damage, injury or loss to:

a. all employees on the Work;
b. all the Work and materials and equipment to be incorporated therein, whether in storage on or off the site; and
c. other property at the site or adjacent thereto, including trees, shrubs, lawns, walks, pavements, roadways, structures, utilities and Underground facilities not designated for removal, relocation or replacement in the course of construction.

ARTICLE 6: WARRANTIES AND BONDS

6.1 The Contractor shall warrant all Work performed for a period of one (1) year from the date of final acceptance in writing by the Owner. If, within one year after the date of final acceptance, any Work is found to be defective, Contractor shall promptly, without cost to the Owner and in accordance with the Owner's written instructions, either correct such defective Work or, if it has been rejected by the Owner, remove it from the site and replace it with non-defective Work.

If the Contractor does not comply promptly with the terms of such instructions, or in and emergency, where delay would cause serious risk of loss or damage, Owner may have the defective Work corrected or his rejected Work removed and replaced, and all consequential costs will be paid by the Contractor.

Draft CONTRACT

1. THIS AGREEMENT, made and concluded this ___ day of ___, between Champaign County Forest Preserve District, Champaign County, Illinois acting by and through its authorized agent, known as the Owner, and _____ his/their agents, employees, parent or subsidiary corporations and assigns.
2. WHEREAS, the Work is officially known as the **Lake of the Woods Concrete** at Lake of the Woods Forest Preserve in Champaign County, Illinois.
3. WHEREAS, the Owner has heretofore requested sealed proposals for the performance of said Work in accordance with the requirements of the Illinois Compiled Statutes, made and provided; and,
4. WHEREAS, the Owner received bids at **10:00AM, CST on October 6th, 2022** and subsequently determined the Contractor's bid to be the lowest, best responsive bid; and,
5. WHEREAS, said Bid was stated as a lump sum price of **$_____**

NOW, THEREFORE, it is hereby covenanted and agreed by and between the Owner and Contractor as follows:

A. That for and in consideration of the payments and agreements mentioned in the General Conditions attached hereto, and made a part hereof, to be made and performed by Owner, the Contractor agrees with said Owner at the Contractor's own proper cost and expense to do all the Work in accordance with the Project Summary, Specifications, and Manufacturer's Recommendation for the **Lake of the Woods Concrete.**

B. And it is also understood and agreed that the Request for Proposal, Project Summary, Instructions to Bidders, Bid Form, Contract, Contract Bond, General Conditions, Specifications, Plans, any Addenda issued, and any other documents included in the Project Manual are all essential Documents of this Contract and are a part hereof, and shall be known as the Contract Documents.

C. That said Work shall commence within thirty (30) days after being notified by the Owner, weather permitting, and the Contractor shall proceed in performing said Work with due diligence and without unnecessary or unreasonable delay and shall complete the same as provided for in the Contract Documents. Contractor shall complete the Work on or before the completion date of **December 1st, 2022,** stipulated herein or within such extended time as may be allowed.

D. That the Project Manager for the **Lake of the Woods Concrete** is **Bridgette Moen, Planning and Projects Coordinator / 217.586.3360 / bmoen@ccfpd.org**

E. The Contractor shall receive payment from the Owner for performance of the Work in accordance with the Illinois Local Government Prompt Payment Act. There shall be a retainage of ten (10) percent withheld from each payment, to be paid after Owner has approved the Work, and has received all certified payroll forms and lien waivers.

F. Payment and contractual question shall be directed to: **John Baker, Director of Business, Finance, HR / 217.586.3360 / jbaker@ccfpd.org**

G. That it is expressly understood and agreed between the parties hereto that the Owner shall determine whether the Work performed is acceptable and whether or not the Contractor is proceeding with all due diligence and without any unnecessary delays.

H. That the Contractor agrees to do all said Work in a good and workmanlike manner to the complete satisfaction of the Owner and, if it appears to the Owner that the Work will not be completed as set forth above, then the Owner reserves the right to suspend the Work or

terminate the Contract in accordance with the provisions of the Contract Documents referenced above.

I. That the Contractor has furnished the Owner with insurance coverage as required in the Contract Documents referenced above.

J. The Contractor shall comply with all federal, state and municipal laws and regulations, including those related to discrimination, prevailing wage, safety, bid rigging, human rights, drug-free workplace preferential employment of Illinois labor, and equal opportunity employment.

K. The Contractor shall indemnify and hold harmless the Owner, its officers and employees as provided in the Contract Documents referenced above.

L. The Contractor shall warrant the Work for a period of one (1) year.

M. The parties agree that in the event the Owner is required to retain an attorney to enforce the provisions of this Contract, if the Contractor is found to be in default, the Contractor shall be required to pay the Owner's reasonable attorney's fees to a maximum amount of ten thousand dollars.

N. The Contractor shall identify any and all Sub-Contractors for this Work to the Owner prior to acceptance of and execution of this contract.

IN WITNESS WHEREOF, the parties have hereunto executed this Contract in triplicate, each of which shall be considered an original as of the day and year first above written.

For Contractor:	For Owner:
_____	Champaign County Forest Preserve District
Name (print): _____	Name (print): _____
Signature: _____	Signature: _____
Attest By: _____	Attest By: _____

Contractor Identification Number: (FEIN or Social Security #) _____

WAVIER OF LIEN AND AFFIDAVIT

( ) FINAL ( ) PARTIAL ( ) PAYMENT TO FOLLOW

STATE OF ILLINOIS COUNTY OF CHAMPAIGN

Whereas the undersigned having contracted with Champaign County forest Preserve District to furnish certain material and/or labor for the project known as **Lake of the Woods Concrete** located at **Lake of the Woods Forest Preserve** in Mahomet, IL.

DOES HEREBY FURTHER STATE ON behalf of the aforementioned subcontractor-supplier.

PARTIAL WAIVER That the balance due from contractor is the sum of:
( ) Receipt of which is hereby acknowledged: or
( ) Payment of which has been promised as sole consideration for this AFFIDAVIT AND WAIVER OF LIEN (PARTIAL) which is given to and for said amount effective upon receipt of such payment.

FINAL WAVIER That the final balance due from contractor is the sum of:
( ) Receipt of which is hereby acknowledged: or
( ) Payment of which has been promised as the sole consideration for this AFFIDAVIT AND WAIVER OF LIEN (FINAL) which is given to and for said amount effective upon receipt of such payment.

THEREFORE: The undersigned waives and releases unto the said owner of said premises any and all lien or claim whatsoever on the above described property and improvements thereon on account of labor and material or both, furnished by the undersigned thereto, and further certifies that no other party has any claim or right to lien o account of any work performed or material furnished to the undersigned for said project, and within the scope of the AFFIDAVIT AND WAIVER.

Given under my hand and seal this _____ day of _____

For: _____ By:

_____
Corporate or Contractor Name Signature and Title

Subscribed and sworn before me this _____ day of _____ 2022_____

Notary Public _____

My Commission Expires:_____

CONTRACT BOND

We
_____,
as Principal, and _____,
as Surety are held and firmly bound unto the Champaign County Forest Preserve District, Champaign County, Illinois (hereafter referred to as Owner) in the penal sum of
_____Dollars
($_____)
lawful money of the United States, well and truly to be paid unto said Owner for the payment of which we bind ourselves, our heirs, executors, administrators, successors and assigns, jointly to pay to the Owner this sum under the conditions of this instrument.

WHEREAS, the condition of this obligation is such that the said Principal has entered into a written contract with the Owner acting through its awarding authority for the construction of Work on the Project known as the **Lake of the Woods Concrete**, which Contract is hereby referred to and made a part hereof, as if written herein at length, and whereby the said Principal has promised and agreed to perform said Work in accordance with the terms of said Contract, and has promised to pay all sums of money due for any labor, materials, apparatus, fixtures or machinery furnished to such Principal for the purpose of performing such Work and has further agreed to pay all direct and indirect damages to any person, firm, company or corporation suffered or sustained on account of the performance of such Work during the time thereof and until such Work is completed and accepted; and has further agreed that this Bond shall inure to the benefit of any persons, firm, company or corporation, to whom any money may be due from the Principal, subcontractor or otherwise, for any such labor, materials, apparatus, fixtures or machinery so furnished and that suit may be obtained on such Bond by any such person, firm, company or corporation, for the recovery of such money.

NOW THEREFORE, if said Principal shall well and truly perform said Work in accordance with terms of said Contract, and shall pay all sums of money due or to become due for any labor, materials, apparatus, fixtures or machinery furnished to him for the purpose of constructing such Work, and shall commence and complete the Work within the time prescribed in said Contract, and shall pay and discharge all damages, direct and indirect, that may be suffered or sustained on account of such Work during the time of the performance thereof and until the said Work shall have been accepted, and shall hold the Owner and its awarding authority harmless on account of any such damages and shall in all respects fully and faithfully comply with all the provisions, conditions, and requirements of said Contract, then this obligation shall be null and void; otherwise it shall remain in full force and effect and upon notice to the Surety of the Principal's failure to perform, the Surety shall perform the obligations of the Principal hereunder.

The Owner may sue on this Bond, and any person furnishing material or performing labor, either as an individual or as a Subcontractor, shall have the right to sue on this Bond in the name of the Owner for its use and benefit.

The said Surety, for value received, hereby stipulates and agrees that no change, extension of time, alteration or addition to the terms of the Contract or the Contract Documents accompanying same or to the Work to be performed thereunder shall in any way affect its obligations on this Bond, and it does hereby waive notice of any such change, extension of time, alteration or addition to the terms of the Contract or to the Work or to the Contract Documents.

PROVIDED, FURTHER, that no final settlement between the Owner and the Principal shall abridge the right to any beneficiary hereunder, whose claim may be unsatisfied.

In addition, the Principal and Surety, jointly and severally, expressly guarantee that all services to be performed, all material to be furnished and all performance under the Contract shall be fulfilled in accordance with all requirements of the Contract and the Contract Documents. This Bond shall remain in effect for a period of one year from the date of substantial completion. In addition, Principal and Surety, jointly and severally, expressly guarantee that in the event the Owner is required to enforce this Bond in a court of law, the Owner will be indemnified with respect to all court costs and reasonable attorneys' and witness fees which are related to such enforcement proceedings.

IN TESTIMONY WHEREOF, the said principal and the said Surety have caused this instrument to be signed by their respective officers and their corporate seals to be hereunto affixed this _____ day of _____ A.D. **2022**.

SURETY	PRINCIPAL
_____	_____
(Name of Surety) (SEAL)	(Company Name) (SEAL)
By: _____	By: _____
(Signature of Attorney in Fact)	(Signature and Title)

STATE OF ILLINOIS, CHAMPAIGN COUNTY

I, _____a Notary Public in and for said County, do hereby certify

that

_____
(insert names of individuals signing on behalf of Principal and Surety)

who are each personally known to me to be the same persons whose names are subscribed to the foregoing instrument on behalf of Principal and Surety, appeared before me this day in person and acknowledged respectively, that they signed, sealed, and delivered said instruments as their free and voluntary act for the uses and purposes therein set forth.

Given under my hand and notarial seal this _____ day of _____, **2022**.

My commission expires _____ _____
Notary Public (Seal)

CHANGE ORDER FORM
Champaign CountyForest Preserve District

Date of Issuance: **Change Order No**._____

Project: Lake of the Woods Concrete

Contractor:

The Contractor is directed to make the following changes in the Contract Documents:

Description of Changes:

Change in Contract Price:

Original Contract Price: ..... _____

Net increase (decrease) in Contract Price due to earlier Change Orders: _____

Contract Price prior to this Change Order ..... _____

Net increase (decrease) in Contract Price due to this Change Order: .... _____

The new Contract Price with approval of this Change Order: ..... _____

_____ The undersigned have determined that the circumstances which necessitate this change were not within the contemplation of the Contract as signed.

_____ The undersigned that this change is in the best interest of the Champaign County Forest Preserve District and is authorized by law.

Approved:

Champaign County Forest Preserve District: Contractor:

_____ _____

Position/Title: Position/Title:

_____ _____

Attachment 1: Specifications

Work Definition: Furnish all labor and materials to install concrete at Lake of the Woods Forest Preserve.

Qualifications: Bidding shall be open to all qualified contractors who have completed at least ten (10) similar applications and have been in service a minimum of three (3) years. References may be requested.

Layout: Owner will provide contractor with a rough location and grading/layout plan. Contractor is responsible for staking out the project. Work shall not begin in an area until staking and grades are completed and approved by Owner.

Excavation and Backfill: Area beneath the proposed site shall be excavated or filled to the required subgrade. In areas where fill is required, only six (6) inch layers of fill shall be placed and each layer compacted prior to placement of fill material. Six (6) inch base course beneath sidewalk shall consist of CA6 gravel and uniformly graded. Excavated earth may be stockpiled and left on site.

Access: Concrete trucks shall be restricted to CCFPD roads and parking areas. Concrete shall be transported to the pour areas via concrete buggy or approved equivalent. Exact routes to be determined during a preconstruction meeting. Vehicles such as trucks may be driven on site with a route to be approved by staff during the preconstruction meeting. Vehicles shall be used for transporting material/equipment only. Workers may park in CCFPD parking lots.

Forms: Forms shall conform to the shape, lines, grades and dimensions of the concrete as staked. Lumber used in forms shall be free from loose knots or other defects. Forms shall be anchored securely to assure form will remain in place when concrete is poured. Forms shall be checked by the Owner prior to pouring of any concrete.

Concrete: Concrete shall be ready mix which has a fourteen (14) day compressive strength of 3,500 p.s.i. when tested in accordance with methods described in A.S.T.M. standards.

Concrete shall be of Class X, Section 504 I.D.O.T. specifications, air content 4-7 percent, slump 3-5 inches, Portland cement – Type 1, ASTM-C150.

On-site testing of the concrete will only take place if the Owner sees the need.

Placing of Concrete: Care shall be taken in the placing of concrete so as not to dislodge the forms. Concrete shall be screened, floated as necessary, finished with a steel trowel and lightly broomed with a coarse brush. Care shall be taken not to work the concrete while it is excessively wet.

Expansion and Control Joints: Expansion joints shall be one half (1/2”) inch pre-molded material of an approved type and shall be recessed a minimum of one-quarter (1/4”) inch below the top surface. Expansion joints shall be placed wherever new pavement abuts existing pavement or structures, every 100’, or as noted in site specifications. Expansion joints shall be sealed with a self-leveling polyeuthane sealant or equivalent. Control joints shall be tooled saw-cut, as needed, to restrict cracking.

Placing New Concrete Next to Existing Concrete: Dowels shall be placed 18 to 24 inches on center when new concrete is abutting existing concrete.

Curing of Concrete: If necessary, covering with polyethylene film or chemical curing agents shall properly cure concrete. If cured with polyethylene film, the film shall be placed as soon as possible after concrete is set to prevent marking and be kept covered for seven days. If a chemical curing agent is used, it shall be sprayed evenly and uniformly over the surface as soon as concrete has been finished. If temperature is expected to reach 32 degrees F., spread blanketing to prevent freezing of concrete. The contractor shall be responsible for replacement of any concrete damaged due to freezing or improper pouring or curing methods, at Contractor's own expense.

Finish Grading: Areas next to the sidewalk vacated by the forms shall be backfilled with clean topsoil and smoothed out so that the area is free of irregularities and depressions. Owner shall seed following completion of work.

Work Schedule: Coordinate scheduling of work with Owner prior to any closures to allow time for Owner to post public notice.

Substitutions: The District encourages the submittal of other approved equal materials as approved in writing by the District. Please state clearly in the bid submittal as to how materials and/or design varies from the specifications.

Site Safety: Contractor to submit company site safety plan for review and approval. It is the responsibility of the contractor to verify location of utilities before start of work and to contact JULIE prior to any excavation. Contractor to exhibit heightened security and safety practices. Owner will assist in site closure through signage, but it is the Contractor's responsibility to prevent public access during work.

Site Inspection: It is the responsibility of the bidder to inspect the locations prior to submitting a bid. No variance in price or conditions shall be permitted based upon a claim of ignorance. Submission of bid shall beconsidered evidence that the Bidder has familiarized himself/herself with the nature and extent of the work, equipment, materials and labor required. Provided measurements and quantities are approximations.

Site Preparation and Stormwater MItigation: Contractor to practice stormwater and erosion best practices, including utilizing catch basin protection as necessary.

Site Protection: Site is located within a public preserve. Contractor to take extra care in keeping a clean and safe job site. Contractor to repair or replace any existing amenities damaged by construction activities at no cost to Owner. Contractor to limit activity outside of limit of work to minimize soil compaction. Fencing is not required around work areas.

Substance Abuse Prevention: Prior to start of work, Contractor to submit plan for substance abuse prevention which meets or exceeds the requirements of the Substance Abuse Prevention on Public Works Projects Act.

Guarantee: The work covered in the site specifications shall be guaranteed for a period of one (1) year from the date of final acceptance against defects of material and for workmanship.

End of Attachment #1.

NOTES:.
1. DIMENSIONS PROVIDED ARE APPROXIMATE, V.I.F.
2. MATCH CONTROL JOINTS TO EXISTING.
3. MAX SLOPE = 5%, MAX CROSS SLOPE = 2%

FOREST PRESERVES
CHAMPAIGN COUNTY

Champaign County
Forest Preserve District
PO Box 1040
Mahomet, IL 61853

217.586.3360
ccfpd.org

Lake of the Woods Concrete

Lake of the Woods
Forest Preserve
109 S Lake of the Woods Road
Mahomet, IL 61853

Drawing Issue	
09/22/2022	Issue for bid

NORTH 0 5 10 20

Base bid

L1

Sheet 1 of 3

NOTES:.

1. DIMENSIONS PROVIDED ARE APPROXIMATE, V.I.F.
2. MATCH CONTROL JOINTS TO EXISTING.
3. MAX SLOPE = 5%, MAX CROSS SLOPE = 2%

FOREST PRESERVES
CHAMPAIGN COUNTY

Champaign County
Forest Preserve District
PO Box 1040
Mahomet, IL 61853

217.586.3360
ccfpd.org

Lake of the Woods Concrete

Lake of the Woods
Forest Preserve
109 S Lake of the Woods Road
Mahomet, IL 61853

Drawing Issue	
09/22/2022	Issue for bid

NORTH 0 5 10 20

Alternate #1

L2

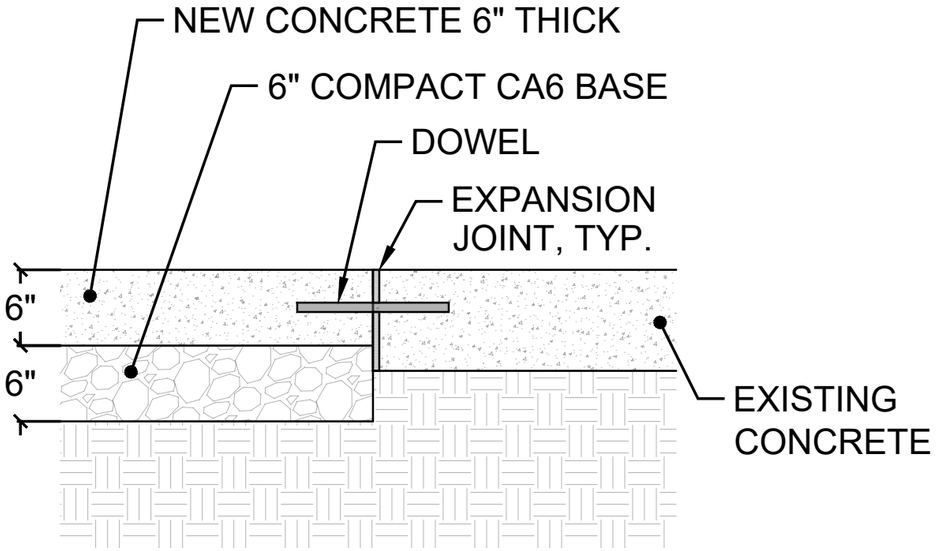

1 CONCRETE SECTION
1" = 1'

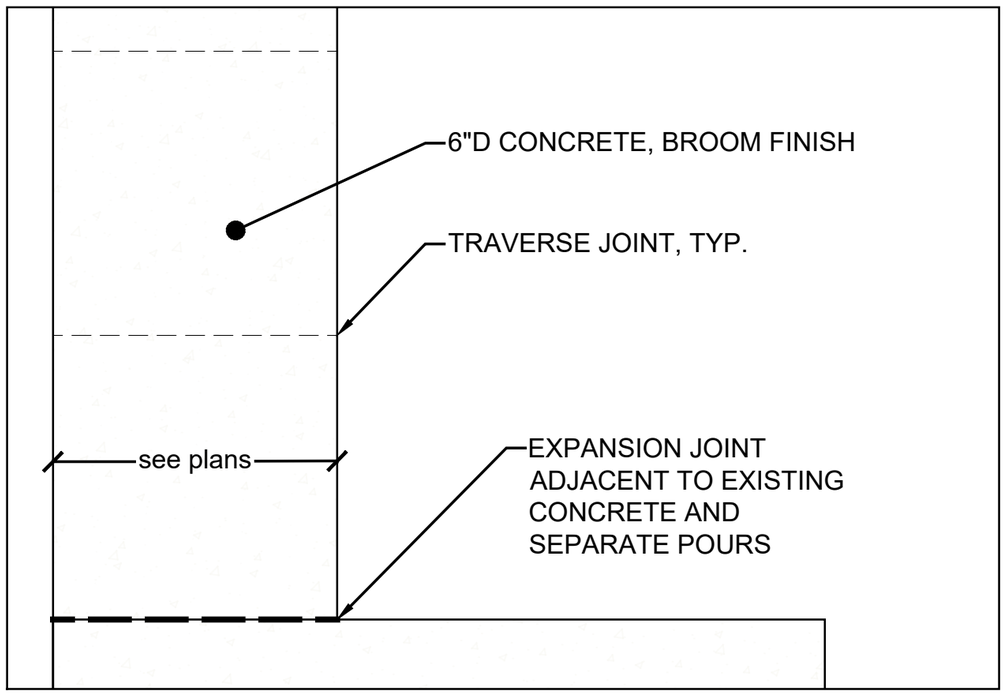

2 CONCRETE PLAN
3/8" = 1'

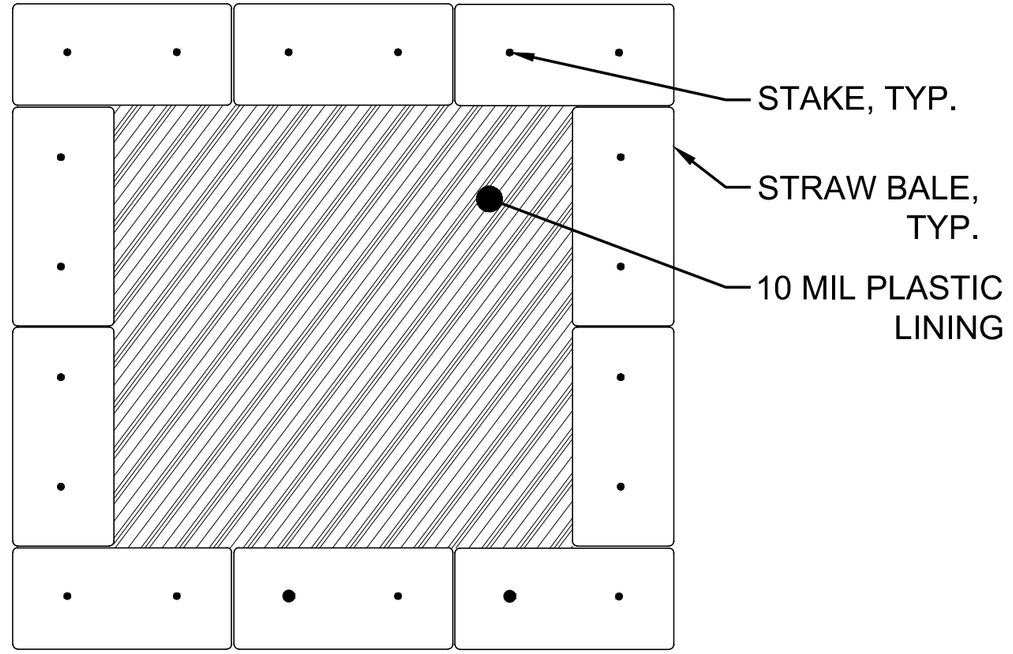

PLAN

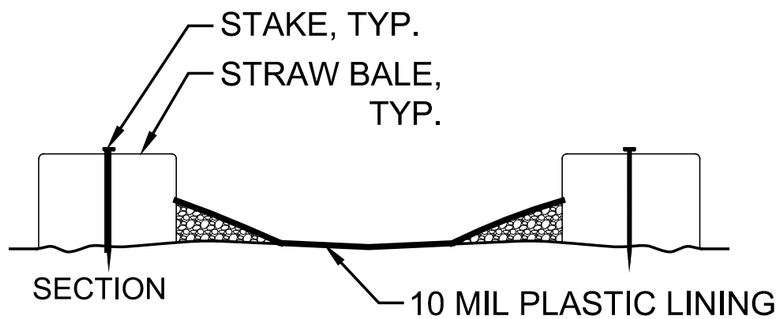

NOTES:

1. ALL CONCRETE WASHING ACTIVITIES TO OCCUR WITHIN WASHOUT AREA TO PREVENT WASTE FROM ENTERING STORM SEWER OR WATERSHED.
2. PROPERLY DISCARD WASTE WHEN DRY.
3. CONCRETE WASHOUT STATION TO BE LOCATED ON SITE BY CONTRACTOR.

3 CONCRETE WASHOUT STATION
3/8" = 1'

FOREST PRESERVES
CHAMPAIGN COUNTY

Champaign County
Forest Preserve District
PO Box 1040
Mahomet, IL 61853

217.586.3360
ccfpd.org

Lake of the Woods Concrete

Lake of the Woods
Forest Preserve
109 S Lake of the Woods Road
Mahomet, IL 61853

Drawing Issue	
09/22/2022	Issue for bid

NORTH 0 5 10 20

Details

L3

Sheet 3 of 3